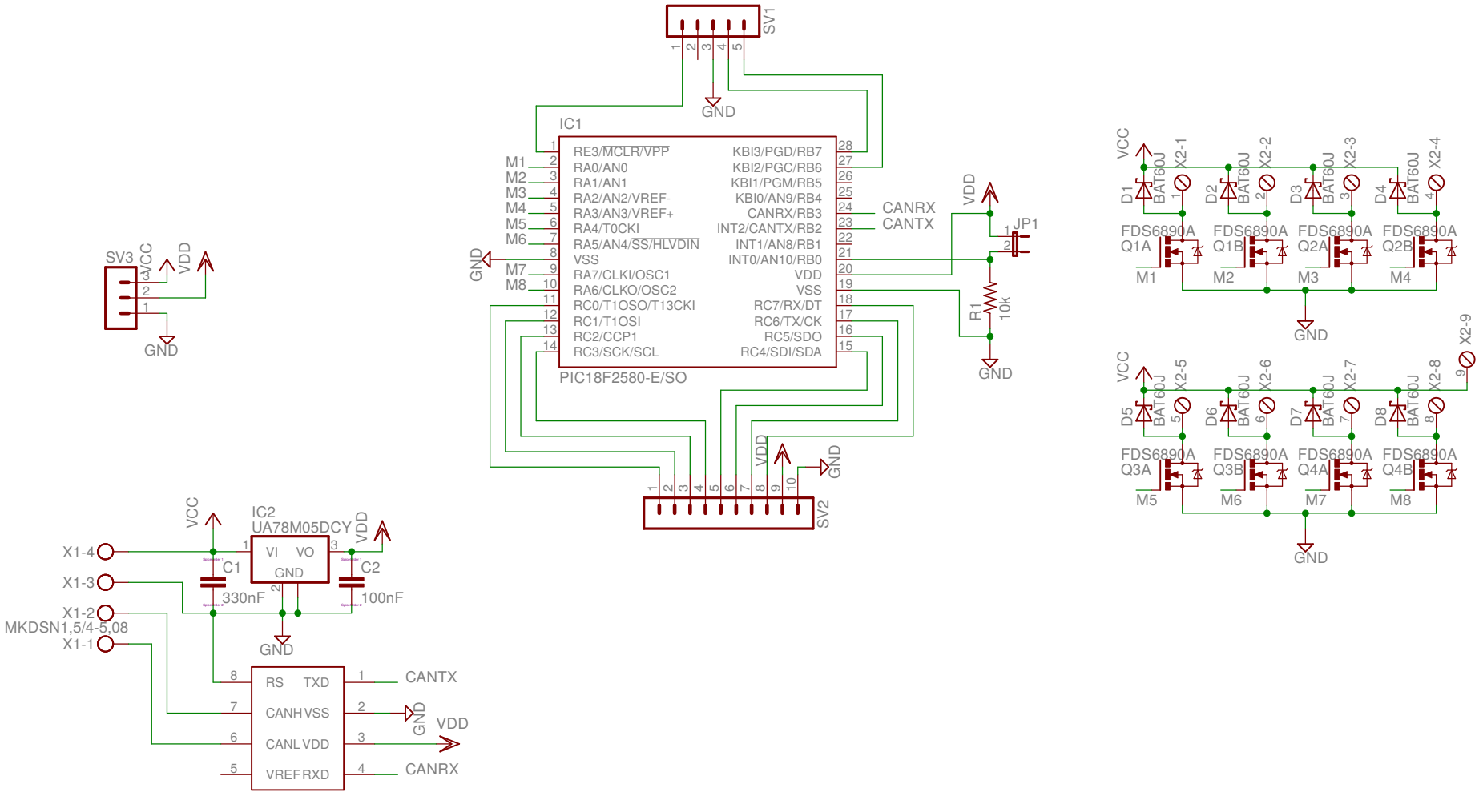

Made by Silvano Seva.

Released under Creative Commons BY-NC-SA 4.0 license

pic can

04/10/16 21:31

Sheet: 1/1